Ku-Band Solid-State Power Amplifiers

SPKM, SPKO14xxxR

Using technology developed for ModuMAX™ amplifiers, these rack-mount SSPAs offer output powers of 50, 70, or 100 watts across the standard 14.0–14.5 GHz or extended 13.75–14.5 GHz satellite uplink bands. The SSPAs incorporate a modular architecture that includes the RF modules, power supplies, logic, fans, and front panel assembly. The amplifiers are designed for reliable service in fixed and mobile applications.

Features

- 50/70/100 W saturated output power
- Digital gain adjustment (20 dB range)
- Forward and reflected power monitoring
- Microprocessor-based monitor and control
- Serial interface (RS-232/-422/-485) standard
- 10 Base-T network interface (SNMP, HTTP)
- RF input and output sample port
- Integral 1:1 redundancy control

Applications

- Single-thread SSPA
- Redundant systems (1:1, 1:2)
- Fixed installations
- Mobile terminals
- Satellite News Gathering (SNG)

Accessories

- RCP-2001 remote panel

Block Diagram

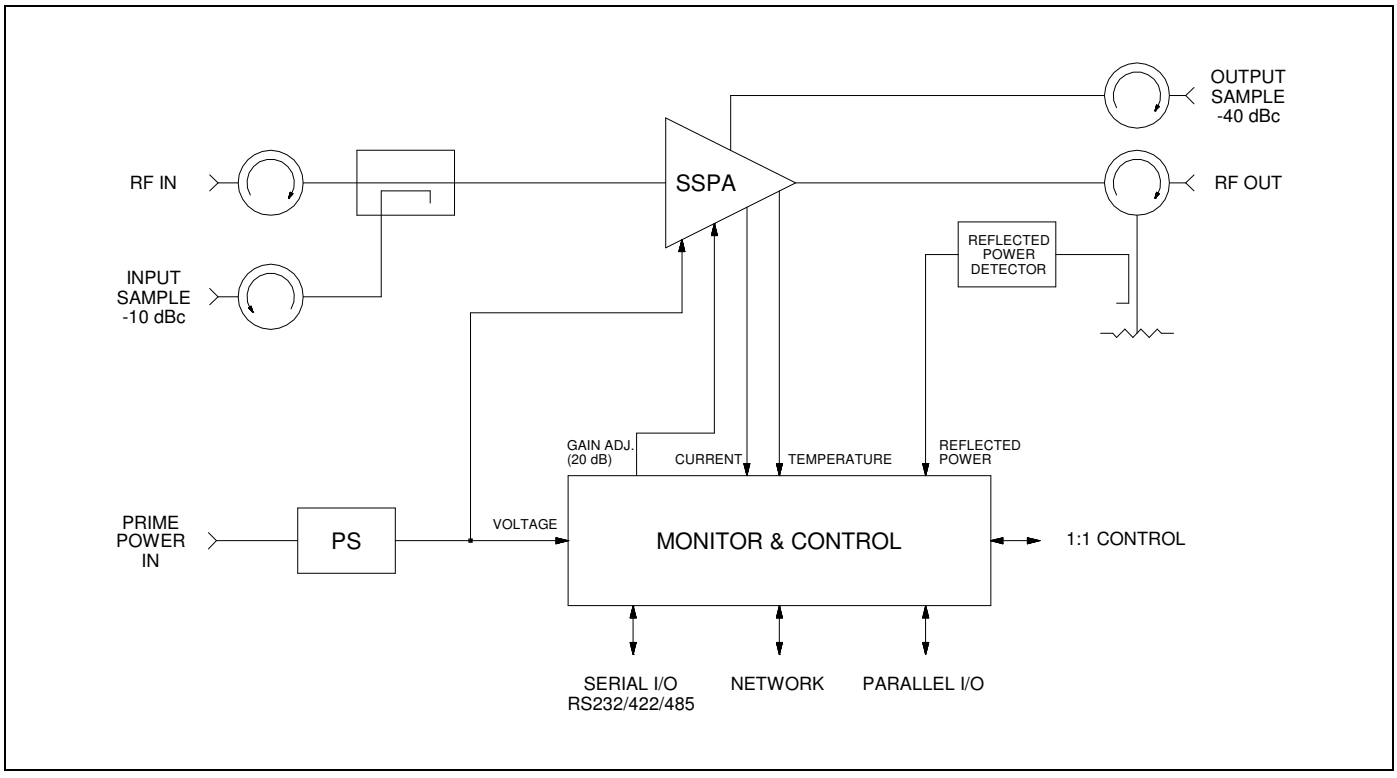

GENERAL DYNAMICS
SATCOM Technologies

Single-Thread SSPA Specifications

Parameter	Notes	Min	Nom/Typ[A]	Max	Units
Frequency Range	Band "M" Band "O"	14.00 13.75		14.50 14.50	GHz GHz
Gain, at maximum gain setting	Standard	70			dB
Gain Adjust Range	Digital, 0.1 dB steps	20			dB
Gain Flatness	Full band Per 40 MHz			±0.75 ±0.3	dB dB
Saturated Power Output	50 W 70 W 100 W		+47 (50) +48.5 (70) +50 (100)		dBm (W) dBm (W) dBm (W)
Power Output at 1 dB compression ($P_{1\ dB}$)	50 W 70 W 100 W	+46.0 (40) +47.5 (56) +49.0 (80)			dBm (W) dBm (W) dBm (W)
Two-tone Intermodulation	At 3 dB total backoff from 1 dB compression point		-30	-25	dBc
Group Delay	Linear Parabolic Ripple			0.03 0.003 1.0	ns/MHz ns/MHz^2 ns p-p
AM/PM Conversion	At $P_{1\ dB}$		2.5	3.5	°/dB
Noise Figure	At maximum gain		8		dB
VSWR	Input Output		1.25 1.20	1.30 1.30	:1 :1
Front Panel Sample Ports	Input Output		-10 -40		dB dB
Connectors	RF Input RF Output Sample Ports Serial I/O Parallel I/O System RCP Link Network Power		Type N Female WR75G Waveguide Type N Female 9-pos D-sub Female, mate supplied 25-pos D-sub Male, mate supplied 15-pos D-sub, Male 9-pos D-sub, Male RJ-45 Jack 4-pos CE05, mate supplied		
Power Requirements	Voltage Frequency Power, 50 W Power, 70 W Power, 100 W Power factor corrected	 47	90–135 or 180–270 500 650 900 0.99	 63 650 [B] 800 [B] 1200 [B]	Vac Hz W W W
Cooling System			Forced air. Intake on front panel.		
Operating Temperature Range	Ambient air temperature	0		+50	°C
Dimensions	See outline drawing		7 H x 19 W x 24 D 178 H x 483 W x 610 D		inches mm
Weight	Approximate		70 (32)		lb (kg)

[A] When there is only one value on a line, this column is a nominal value. Otherwise it is a typical value. Typical values are intended to illustrate typical performance, but are not guaranteed.

[B] Cold start, at -40 °C and P_{OUT} in saturation.

Outline Drawings, SSPA (top) and Typical 1:1 Redundant System (bottom)

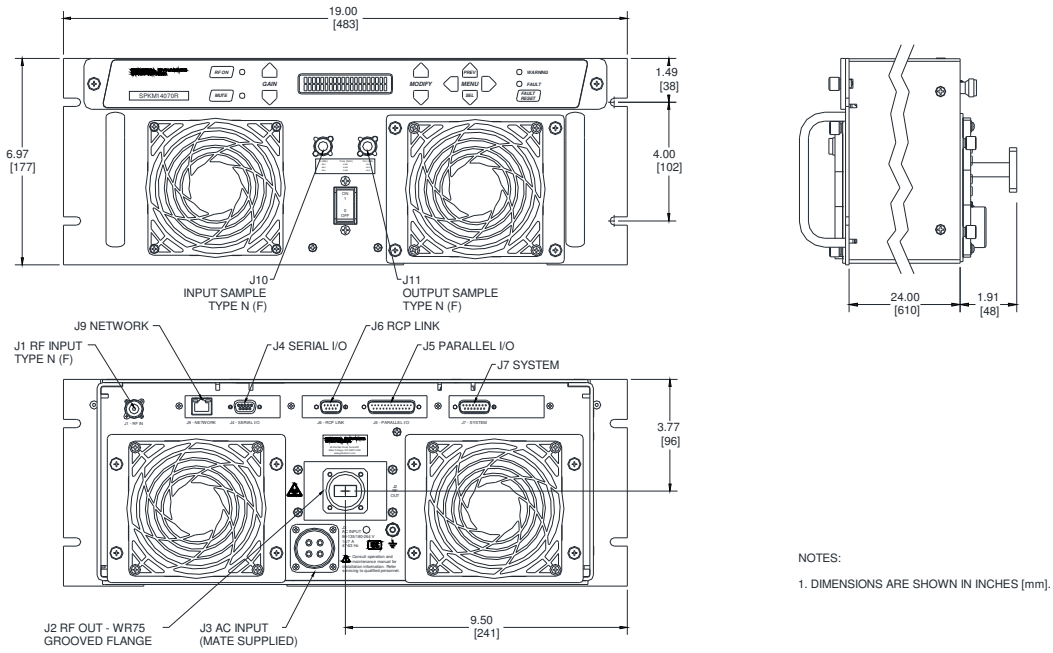

Outline 18502

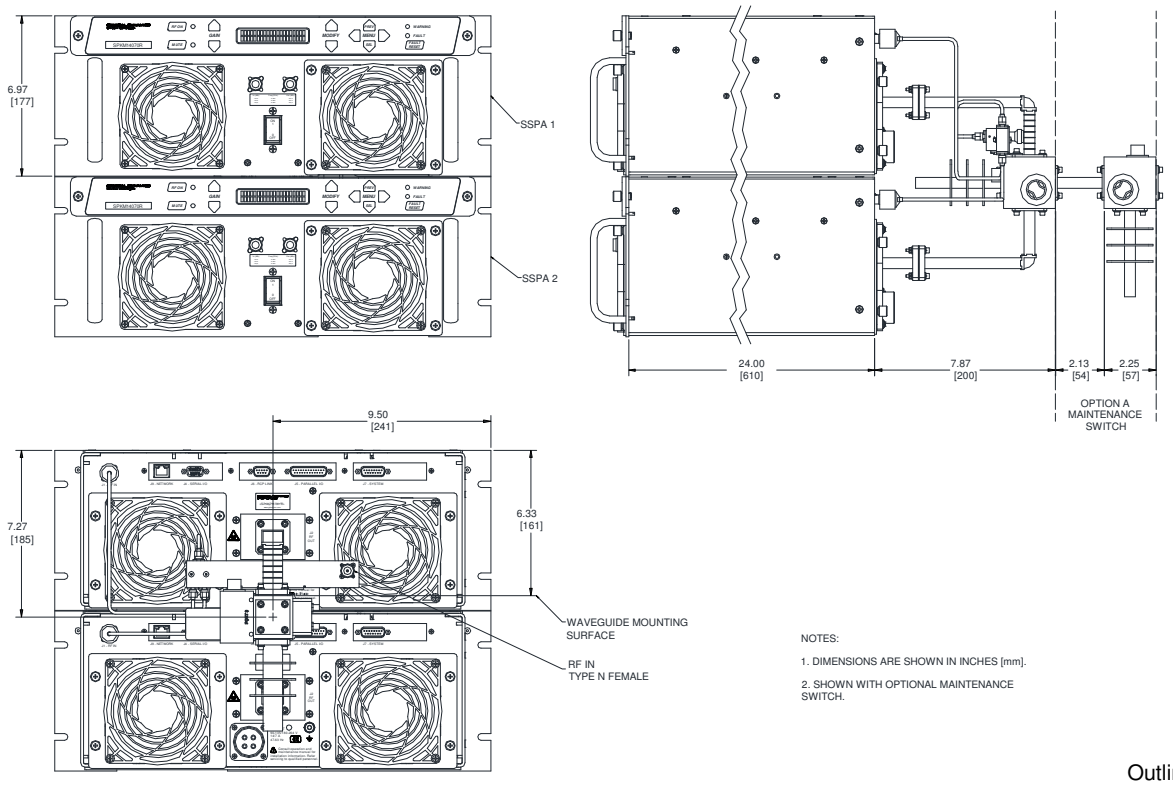

Outline 18712

Connector Interface

Ref. Des.	Function	Connector Type	Mating Connector	Comment
J1	RF Input	Type N Female	Type N Male	
J2	RF Output	WR75G Waveguide	WR75 Flange	
J3	AC In	4-pos CE05, Male	4-pos MS or CE05, Female	Mate supplied
J4	Serial I/O	9-pos D-sub, Female	9-pos D-sub, Male	Mate supplied
J5	Parallel I/O	25-pos D-sub, Male	25-pos D-sub, Female	Mate supplied
J6	RCP Link	9-pos D-sub, Male	9-pos D-sub, Female	
J7	System	15-pos D-sub, Male	15-pos D-sub, Female	
J9	Network	RJ-45 Jack	RJ-45 Plug	
J10	Input Sample	Type N Female	Type N Male	Front panel mounted
J11	Output Sample	Type N Female	Type N Male	Front panel mounted

Part Number/Ordering Information

SSPA:

Part/Model No. SPK□14□□R

14.00–14.50 GHz = M
13.75–14.50 GHz = O

50 Watts = 050
70 Watts = 070
100 Watts = 100

* Performance specifications of a redundant system depend on the installed configuration and optional accessories. Contact the factory for more information and for 1:2 system capabilities.

1:1 Redundant System:*

Part/Model No. SPRK1□□□R-X

14.00–14.50 GHz = M
13.75–14.50 GHz = O

50 Watts = 050
70 Watts = 070
100 Watts = 100

Option:

Maintenance Switch..... A
Selects antenna or dummy load at system output

Related Accessory:

RCP-2001, SSPA Remote Control Panel

1U-high rack-mount panel enables remote manual control of the SSPA. Can be located up to 1.3 km (4000 ft.) away and interconnects with inexpensive cable. (One panel is required for each SSPA in a redundant system, for full remote manual control.)

Other Products

- Solid-State Power Amplifiers and SSPA Systems
- Solid-State Power BUCs and SSPB Systems
- Low Noise Amplifiers and LNA Systems
- Low Noise Block Converters and LNB Systems
- Block Up and Block Down Converters
- Synthesized Converters
- Line Drive Amplifiers
- Power Supply Monitors
- Redundant Control Panels for SSPAs, SSPBs, and LNAs

GENERAL DYNAMICS
SATCOM Technologies

60 Decibel Road, Suite 200 • State College, PA 16801 USA • Tel. +1-814-238-2700 • FAX +1-814-238-6589
Email: satcom@gd-ms.com • www.gdsatcom.com/electronics.php

© 2015 General Dynamics. All rights reserved. General Dynamics reserves the right to make changes to its products and specifications at any time and without notice.
All trademarks indicated as such herein are trademarks of General Dynamics. All other product and service names are the property of their respective owners.